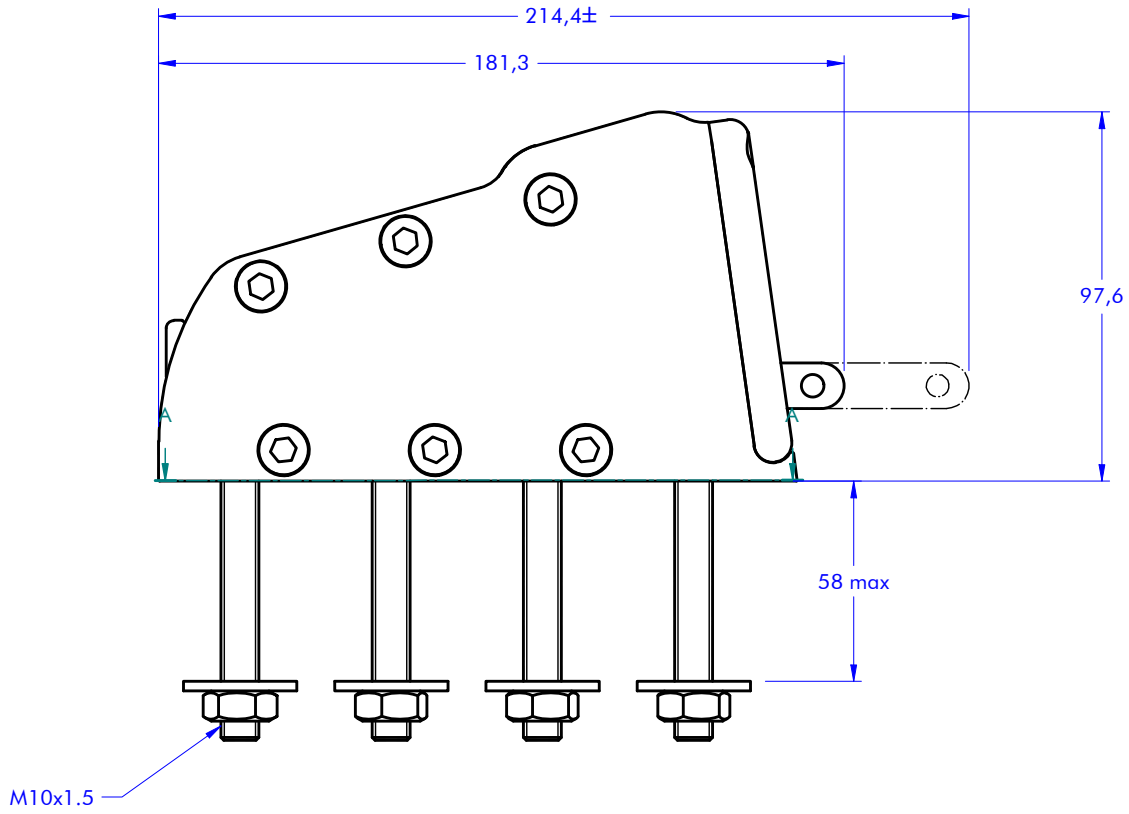

A-A (1 : 2)

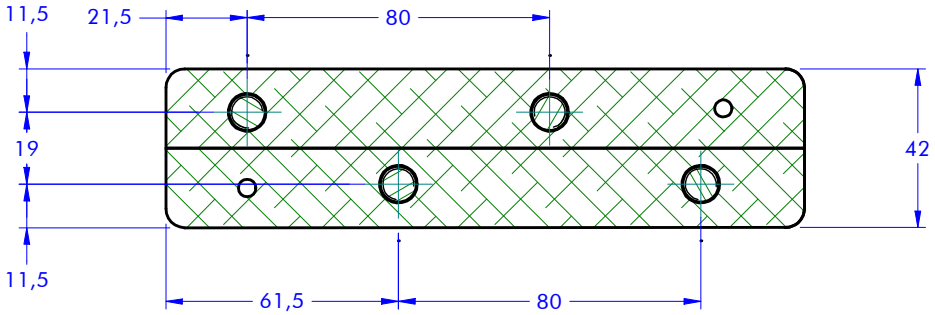

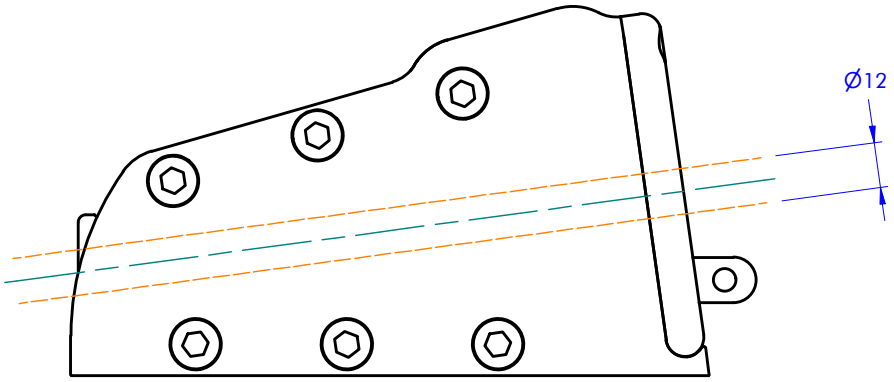

antal	Clutches (CATEGORY)	DV jammers (FAMILY)	505.122 (MODEL CODE)	(SWL)	1.58 kg (WEIGHT)
	Complete array (ARTICLE)			12/05/2020 (DATE)	1 : 2 (SCALE)

www.antal.it - antal@antal.it